Transko

CS32

MINIATURE CERAMIC SMD CRYSTAL (3.2 x 2.5 x 0.6mm)

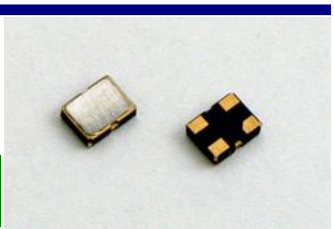

FEATURES:

- **WIDE FREQUENCY RANGE**
- **LOW COST SMD PACKAGE**
- **LOW PROFILE / SUITABLE FOR REFLOW**

RoHS Compliant

MODEL	CS32
FREQUENCY RANGE	10.000MHz ~ 80.000MHz
FREQUENCY TOLERANCE	± 30ppm (see below for other options)
TEMPERATURE STABILITY	± 50ppm (see below for other options)
OPERATING TEMPERATURE	STD: 0°C to 70°C (see below for other options)
STORAGE TEMPERATURE	-40°C to 85°C
SHUNT CAPACITANCE	7.0pF max
LOAD CAPACITANCE	STD: 12pF, (see below for other options)
DRIVE LEVEL	100uW max.
AGING	± 5.0ppm / year @ 25°C ± 3°C
INSULATION RESISTANCE	500MΩ min. at 100VDC ± 15VDC
OPERATION MODE	Fundamental
ESR	6.000MHz ~ 9.999MHz: 200Ω max. 10.000MHz ~ 11.999MHz: 100Ω max. 12.000MHz ~ 18.999MHz: 80Ω max. 19.000MHz ~ 60.000MHz: 50Ω max.

PACKAGE DIMENSIONS

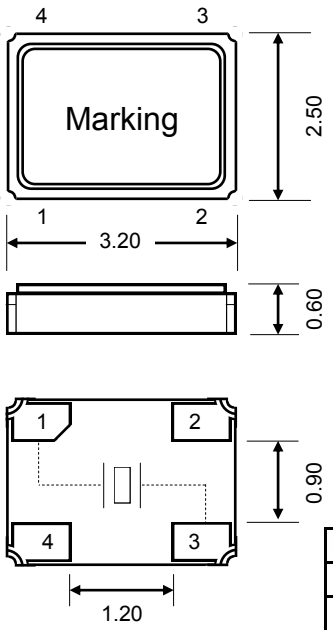

Unit : mm

Pin Configuration	
1	Xtal
2	Ground
3	Xtal
4	Ground

SOLDER PATTERN

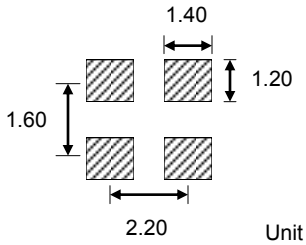

Unit :mm

REFLOW PROFILE

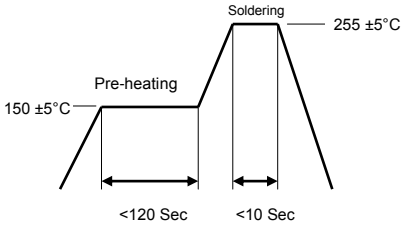

Note: Consult factory for detail

PART NUMBERING GUIDE

CS32 – F – 00 – 00 – HM – 08 – 40.000M – TR

Mode
F: Fundamental

Stability
00: ± 100ppm
50: ± 50ppm
25: ± 25ppm
15: ± 15ppm
10: ± 10ppm

Load Capacitance
08: 8pF **20:** 20pF
10: 10pF **22:** 22pF
12: 12pF **24:** 24pF
16: 16pF **28:** 28pF
18: 18pF **32:** 32pF

Other Options
TR: Tape and reel

Tolerance @ 25°C
00: ± 100ppm
50: ± 50ppm(standard)
30: ± 30ppm
25: ± 25ppm
10: ± 10ppm

Operating Temperature
A: -55 **G:** -10 **P:** 80
B: -50 **H:** 0 **Q:** 85
C: -40 **J:** 50 **R:** 90
D: -35 **K:** 60 **S:** 100
E: -30 **M:** 70 **T:** 105
F: -20 **N:** 75 **U:** 125
X: custom

Frequency
M: MHz

Transko Electronics, Inc reserves the right to make changes to the product (s), service (s), and specification (s) described herein without notice. See "Terms of Sale" for details on our website.

Transko Electronics, Inc. 1156 N. Gilbert Street Anaheim, CA 92801 USA
Tel: 714-491-8089 Fax: 714-778-1361 Website: www.transko.com E-mail: sales@transko.com